CUSTOMER

RoHS

HF

Specifications:

1. Electrical Characteristics:
   1-1. Contact Resistance: 30mΩ Max.(Initial),50mΩ Max.(After test)
   1-2.Dielectric Withstanding Voltage:500V AC For One Minute
   1-3.Insulation Resistance :1000MΩ Min.MEASURED BY 500V DC.
2. Mechanical Characteristics:
   2-1. Insertion Force :2.7kgf Max.
   2-2. Withdrawal Force: 1.0kgf Min. initial, 0.7kgf Min after test.
3. Life Test :5000Cycles.
4. XX Mark Is FAI DIM. ▲ Mark Is CPK DIM.

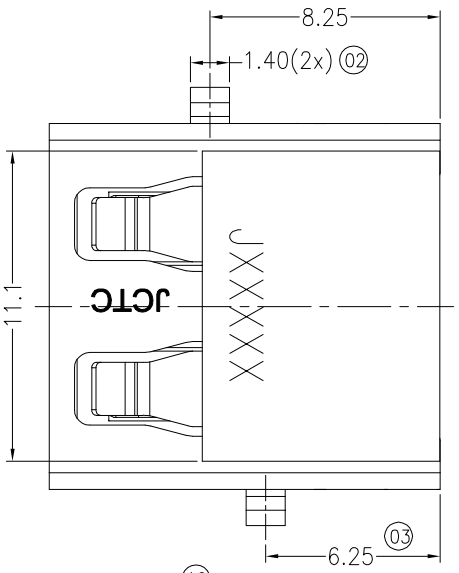

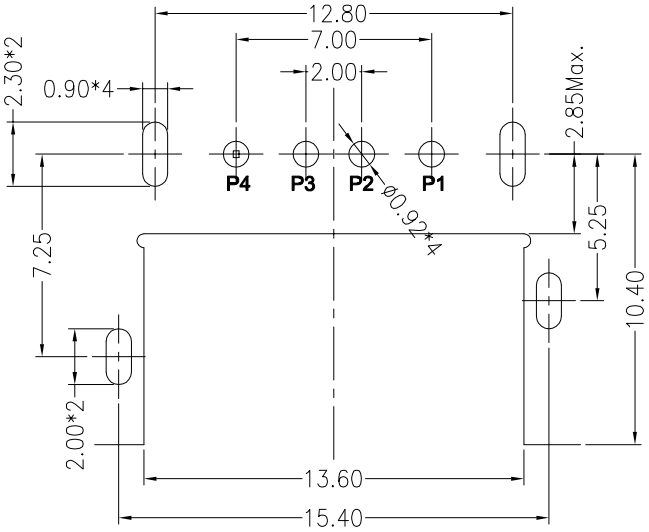

Recommended P.C.B Layout (Component Side)
P.C.B Thichness=1.2mm (Tolerance=±0.05)

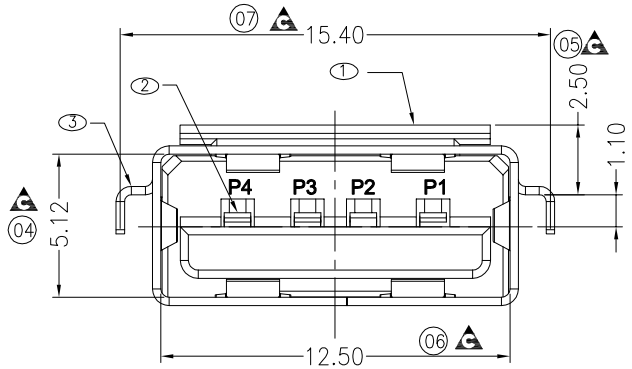

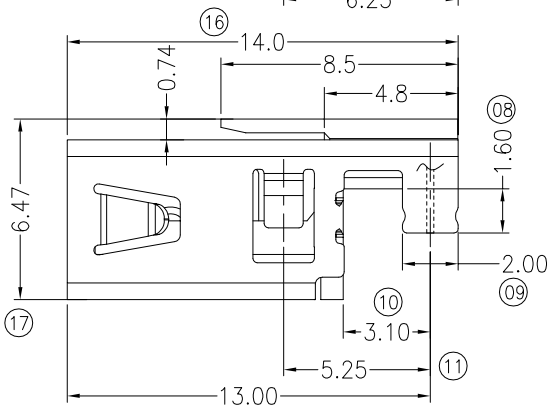

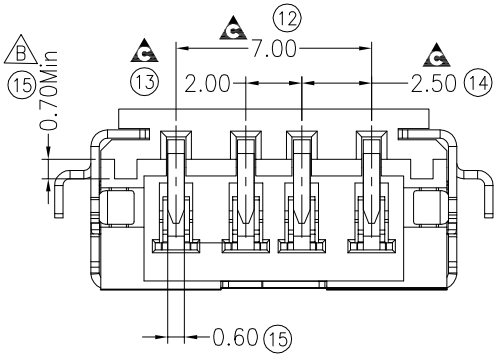

NO.	PARTS	Q'TY	MATERIAL	PLATING&COLOUR
3	SHELL	1	Metal T=0.3mm	ALL OVER Ni
2	TERMINAL	4	PHOSPHOR BRONZE, T=0.25mm	G/F ON CONTACT ARER Sn 100 u"ON SOLDER AREA ALL OVER Ni 50 u" Min
1	HOUSING	1	LCP UL94 V-0	BLACK

版次REV.	变更内容 DESCRIPTION	日期 DATE
C	MODIFY THE PLASTIC STRUCTURE	01.12'16
B	CHANGE THE HEIGHT OF STAND OFF	04.28'14
A	NEW VERSION	03.24'12

UNIT: MM
SIZE: A4

GENERAL TOLERANCES	
LINEAR	ANGLES
0.0 ±0.25	X°REF± 6°
0.00 ±0.15	X° ± 3°
0.000±0.02	X°X' ± 2°

SCALE:	NAME	DATE
APPROVED		
DESIGNER		
DRAWN		

WJCT
苏州伟聚电子科技有限公司

TITLE: USB2.0 RECEPTACLE H2.5 A TYPE

PART.NO: WUSF0704-0A00

DWG.NO: 605-0000-0006

REV: C

SHEET: 1/1