Bill

CUSTOMER

RoHS

HF

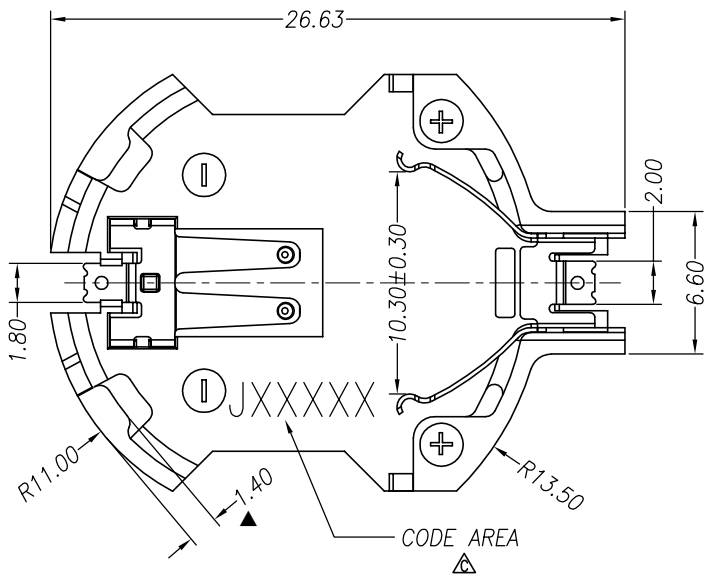

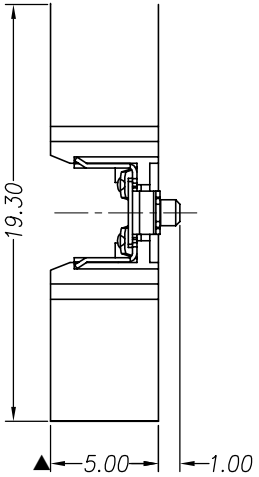

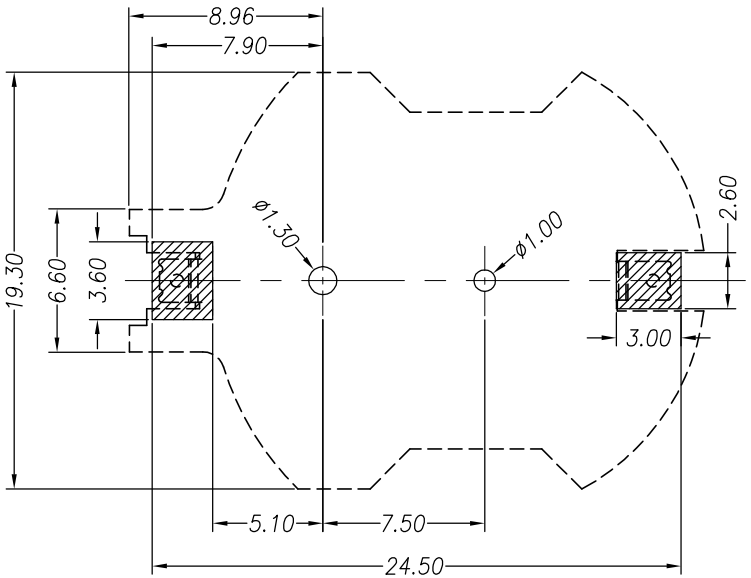

RECOMMENDED PCB LAYOUT(TOP VIEW)

PCB=1.20±0.05mm

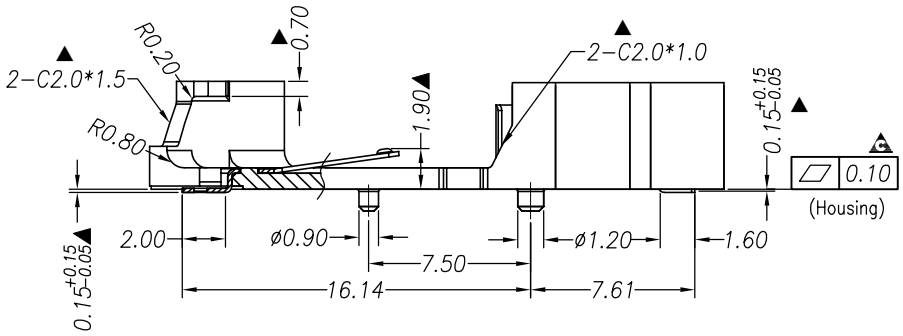

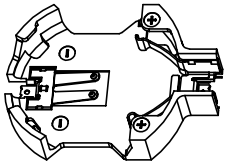

Notes:

1.Dielectric Withstanding Voltage : 500VAC/minute

2.Insulation Resistance: 1000M3.Current rating: 1 A

4.Rated voltage: 50V AC/DC

5.Contact Resistance: 50m

6.▲ Mark is major DIM. Mark is CPK DIM.

7. After IR,the planeness of housing: 0.12mm Max.

8.Part NO. W5000102-002

02: 2PIN

Battery series

CODE DATA

J X XX XX

JCTC

year

month

date

PART	Q'TY	MATERAIL&FINISH
Housing	1	LCP E6808, UL94V-0(Black)
Terminal 1	1	SUS304/30u" Sn plated on contact area,80u" Sn plated on solder area,Ni plated over all
Terminal 2	1	

REV.	REVISION RECORD	DATE
A	New edition	6.11'14
B	10.30REF-->10.30±0.30	6.23'14
C	CORRECT CODE AREA	1.8'16

UNIT: MM

SIZE: A4

GENERAL TOLERANCES	
LINEAR	ANGLES
0.0 ±0.25	X°REF± 6°
0.00 ±0.15	X° ± 3°
0.000±0.05	X°X' ± 2°

SCALE: 1:1	NAME	DATE
APPROVED		
DESIGNER		
DRAWN	YXY	1.8'16

WJCT

苏州伟聚电子科技有限公司

TITLE: CR2032 Round Battery Holder

(加强版)

PART.NO: W5000102-002

DWG.NO: CW5000102-002

REV: C

SHEET: 1/1